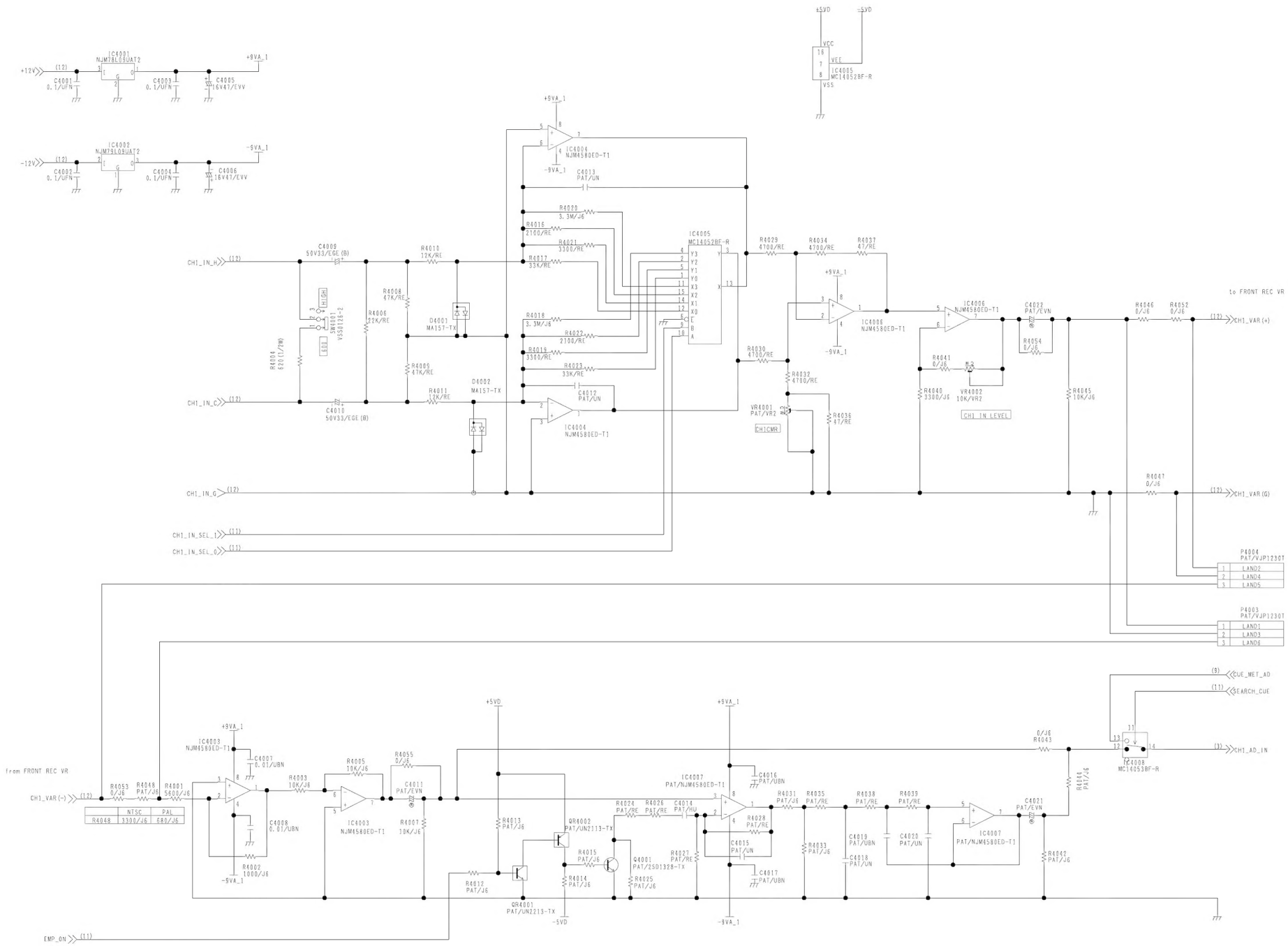

NTSC	PAL
R4048 3300/J6	680/J6

COMPONENT NAME	ADDA_CUE	01/12
CIRCUIT BOARD NO.	COMPONENT PATH	
VEP84293A:NTSC VEP84293B:PAL		
KR4F28(1/12)-1		SCM136

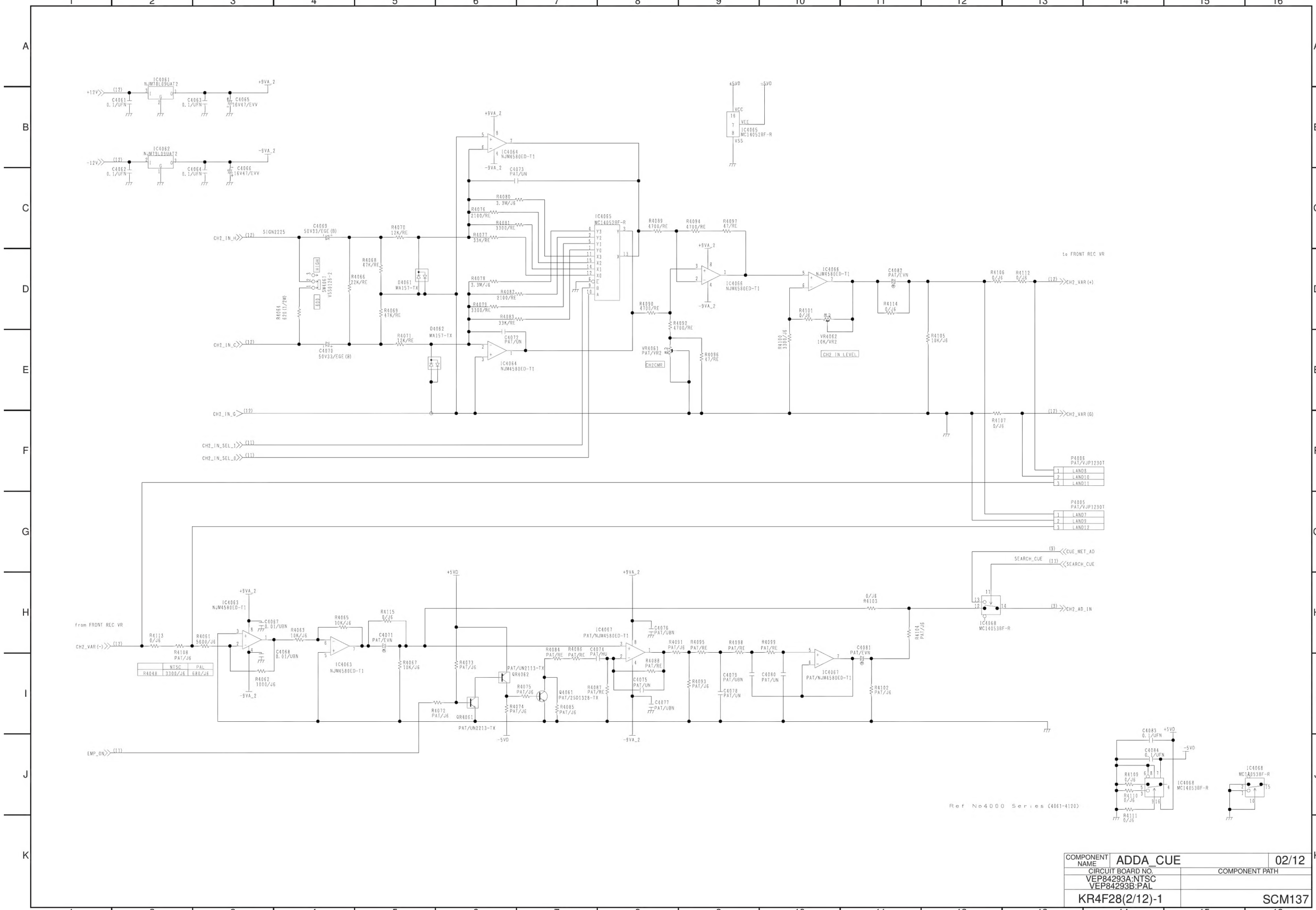

COMPONENT NAME	ADDA_CUE	02/12
CIRCUIT BOARD NO.		COMPONENT PATH
VEP84293A:NTSC VEP84293B:PAL		
KR4F28(2/12)-1		SCM137

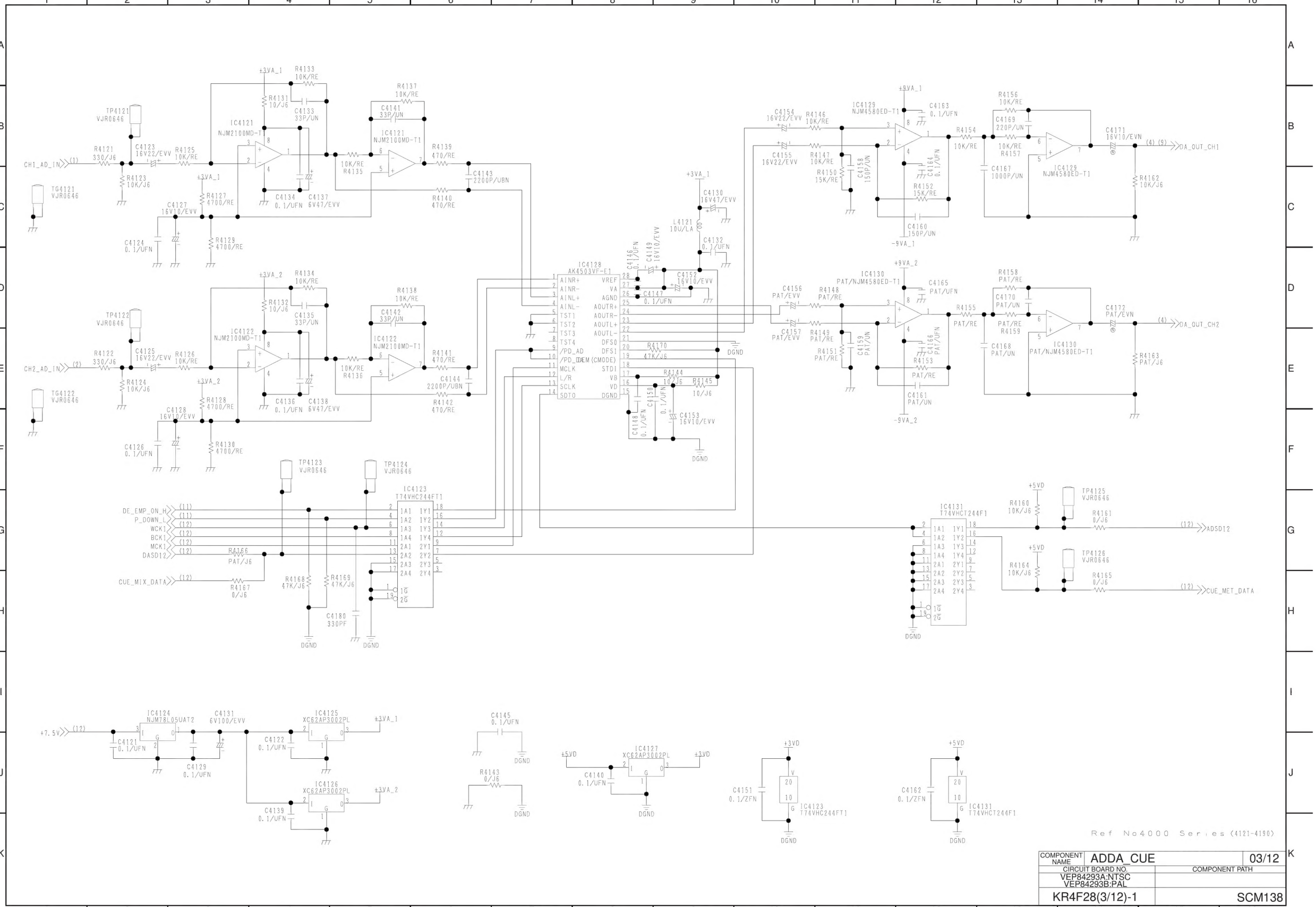

Ref No4000 Series (4121-4190)

COMPONENT NAME	ADDA_CUE	03/12
CIRCUIT BOARD NO.	COMPONENT PATH	
VEP84293A:NTSC VEP84293B:PAL		
KR4F28(3/12)-1		SCM138

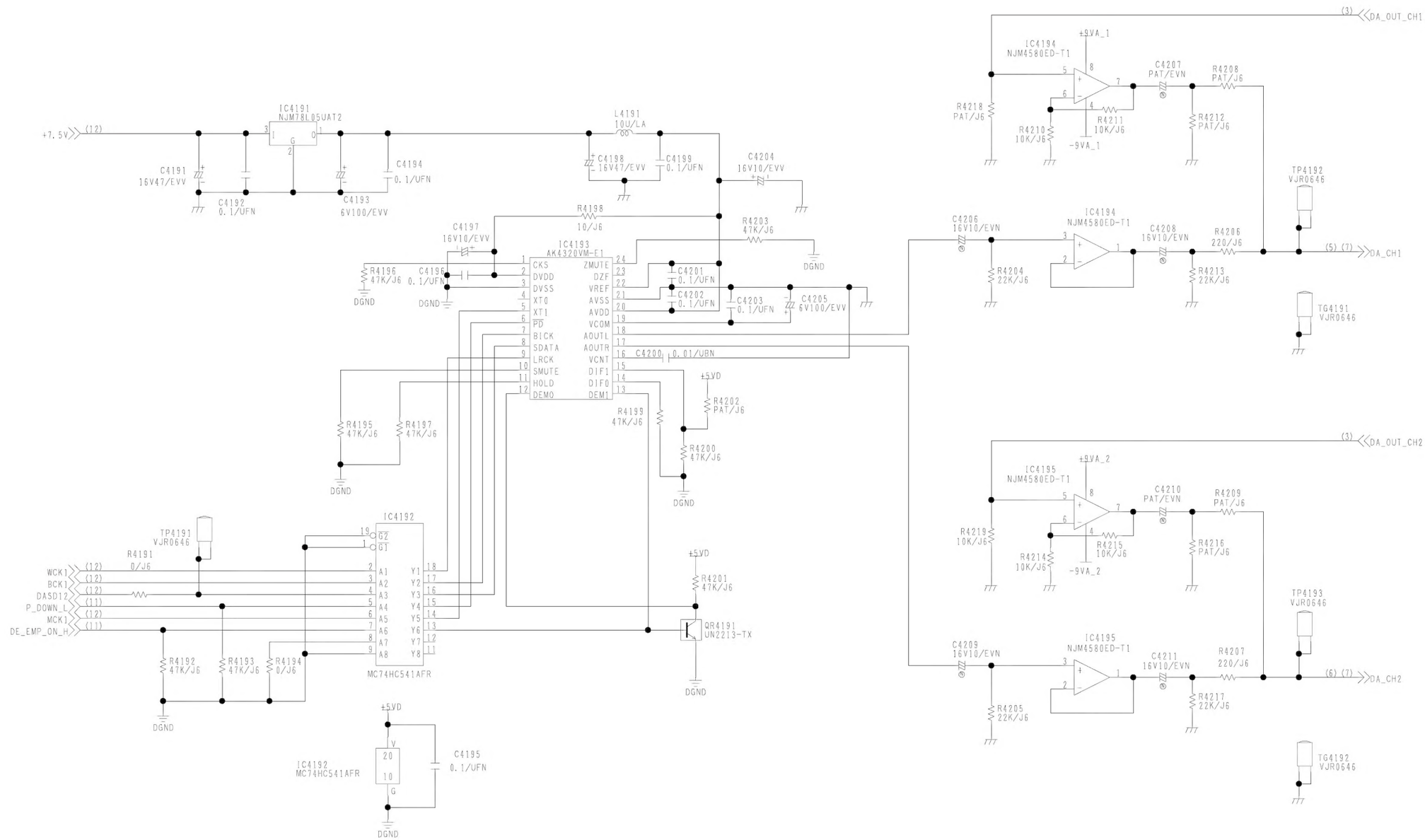

Ref No4000 Series (4191-4220)

COMPONENT NAME	ADDA_CUE	04/12
CIRCUIT BOARD NO.	COMPONENT PATH	
VEP84293A:NTSC VEP84293B:PAL		
KR4F28(4/12)-1		SCM139

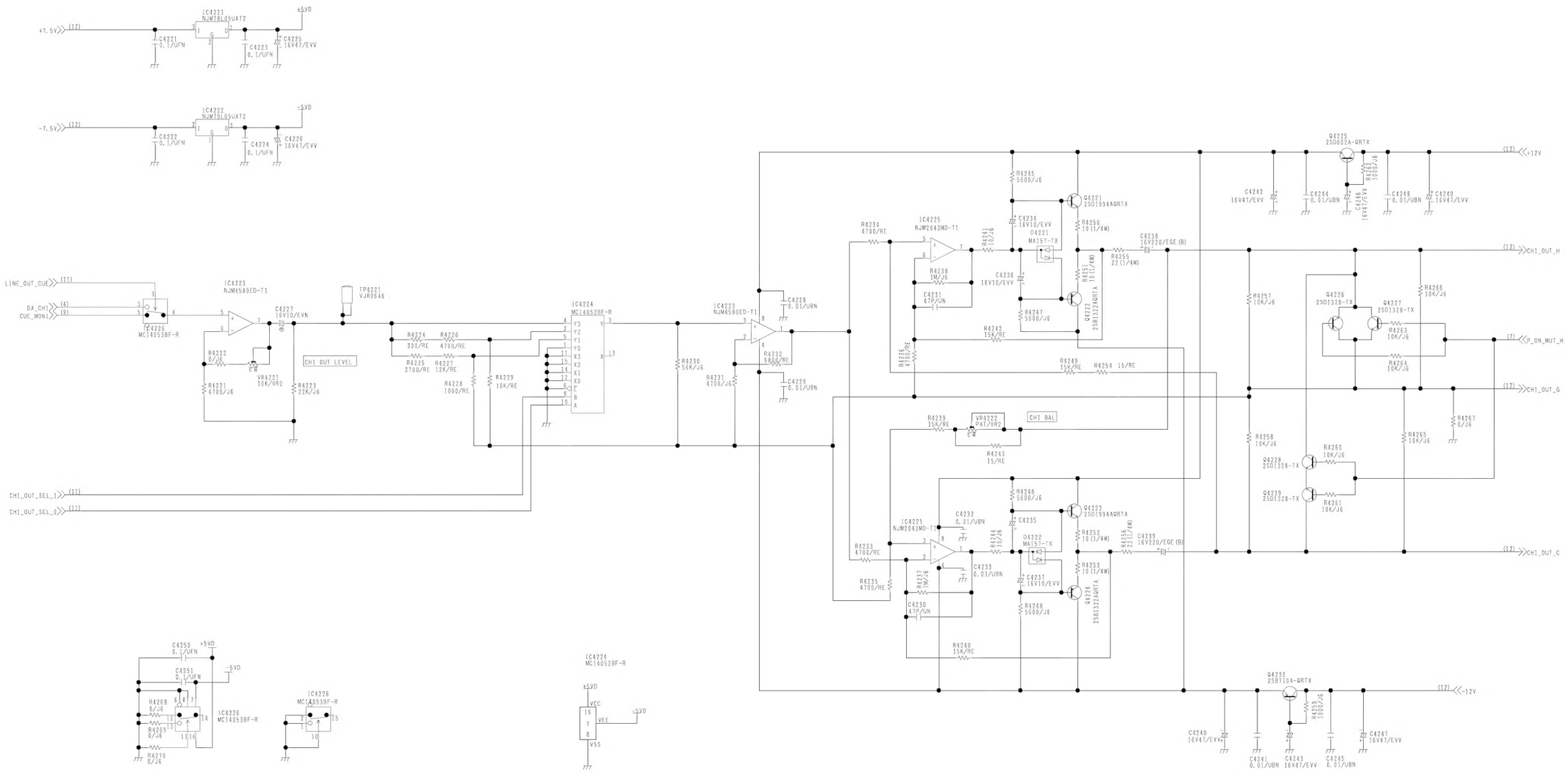

CONTROL SIGNAL		OUTPUT LEVEL	
(SEL_0) A	(SEL_1) B		
0	0	Y0	MUTE
1	0	Y1	−20dBu
0	1	Y2	0dBu
1	1	Y3	+4dBu

Ref No4000 Series (4221-4280)

COMPONENT NAME	ADDA_CUE	05/12
CIRCUIT BOARD NO.	COMPONENT PATH	
VEP84293A:NTSC VEP84293B:PAL		
KR4F28(5/12)-1		SCM140

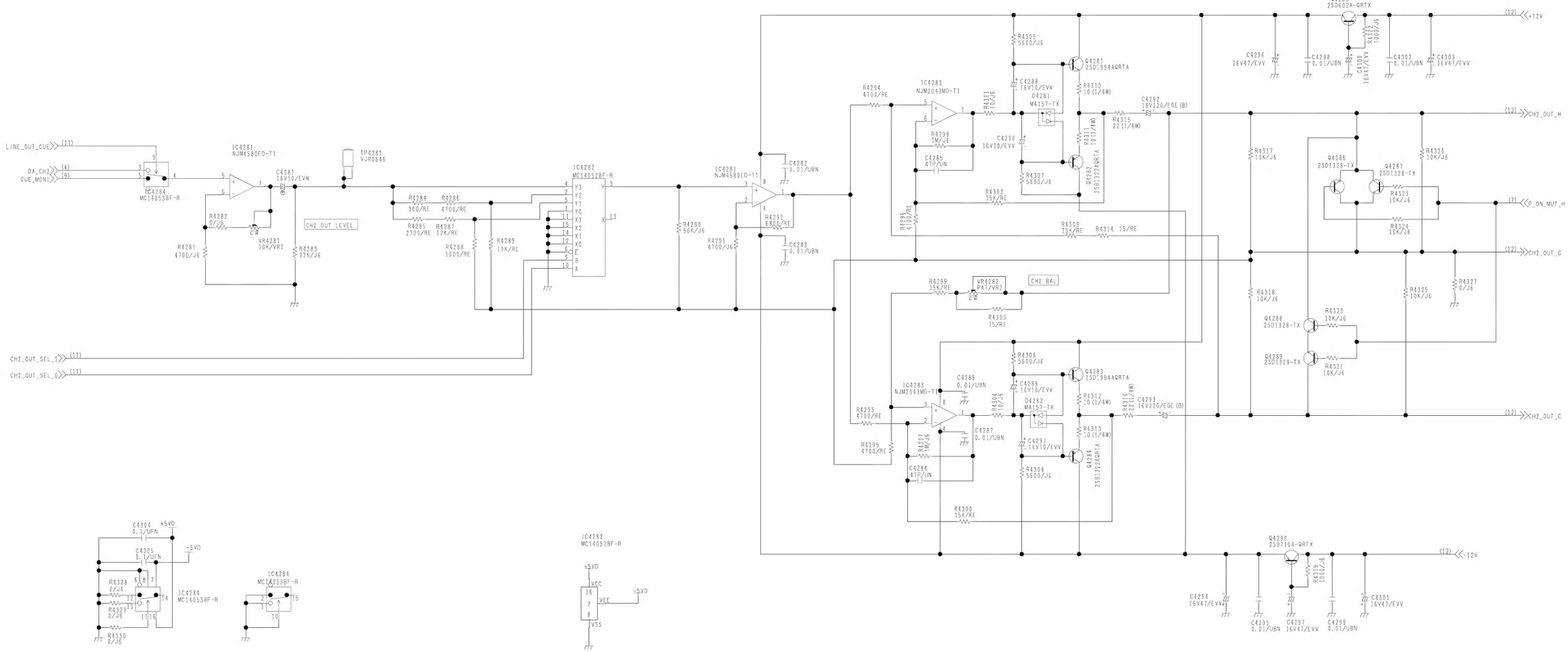

CONTROL SIGNAL		OUTPUT LEVEL	
(SEL_0) A	(SEL_1) B		
0	0	Y0	MUTE
1	0	Y1	−20dBu
0	1	Y2	0dBu
1	1	Y3	+4dBu

Ref No4000 Series (4281-4348)

COMPONENT NAME	ADDA_CUE	06/12
CIRCUIT BOARD NO.		COMPONENT PATH
VEP84293A:NTSC VEP84293B:PAL		
KR4F28(6/12)-1		SCM141

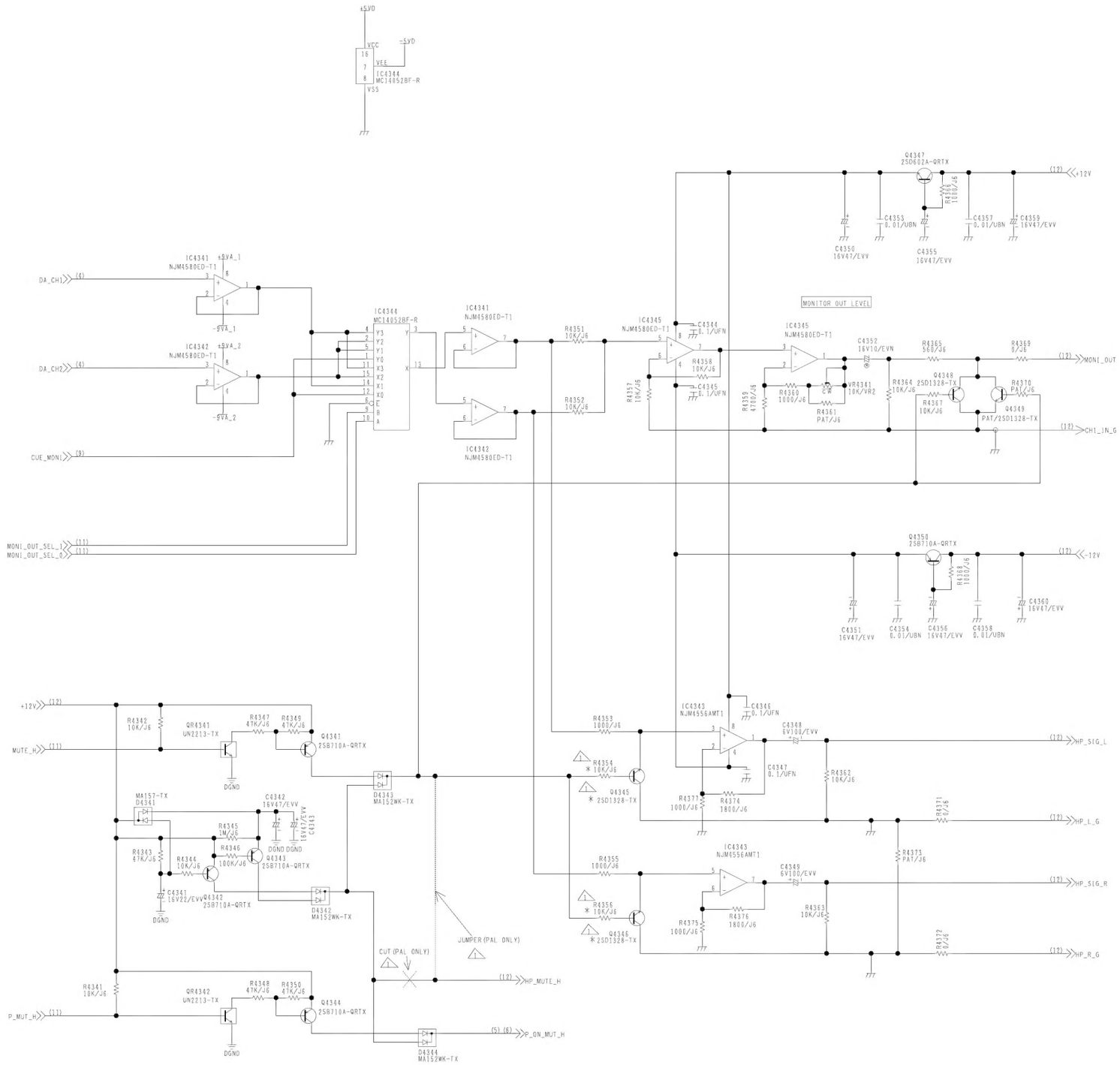

Ref No4000 Series (4341-4380)

COMPONENT NAME	ADDA_CUE	07/12
CIRCUIT BOARD NO.		COMPONENT PATH
VEP84293A:NTSC VEP84293B:PAL		
KR4F28(7/12)-1		SCM142

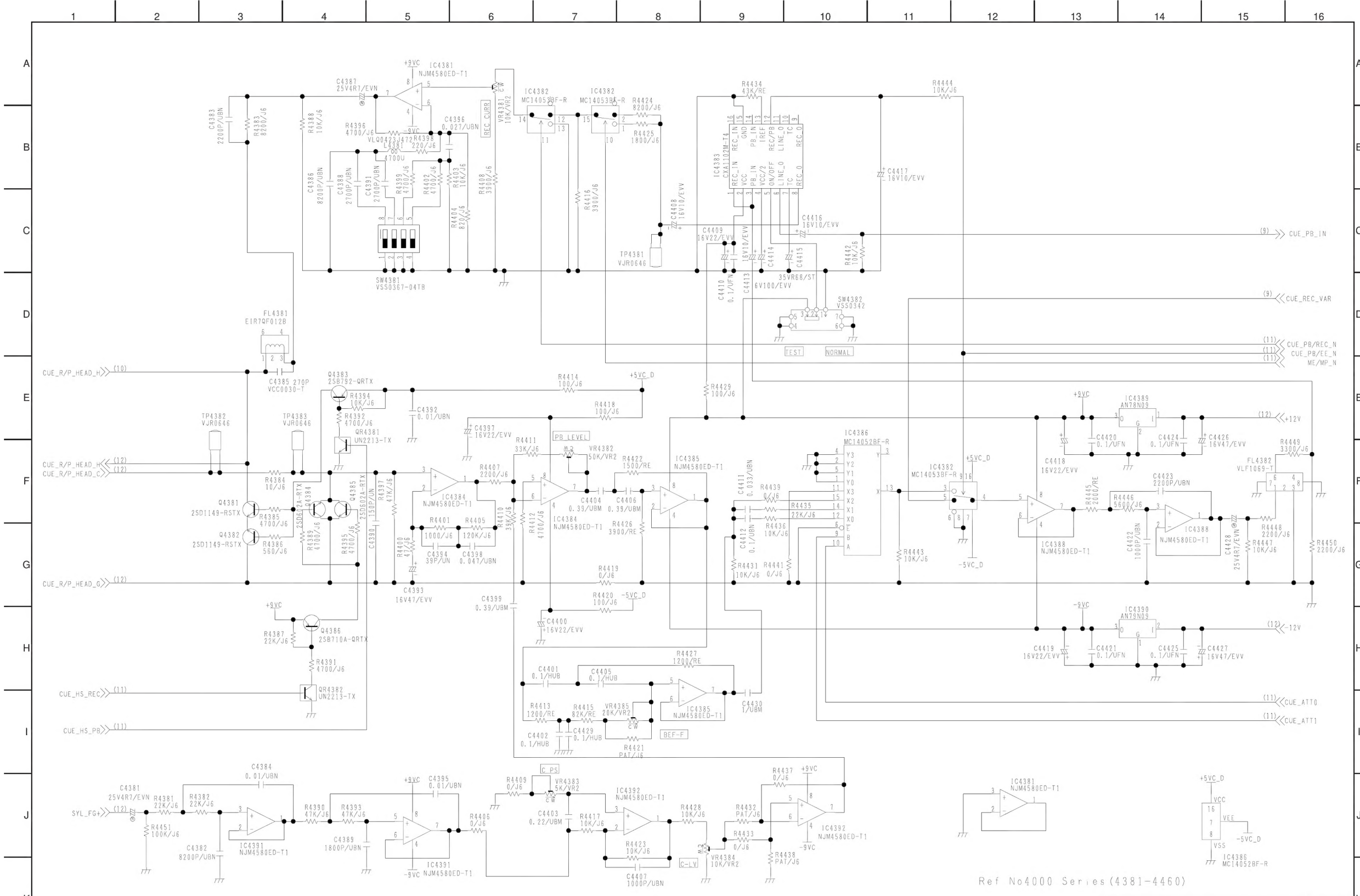

COMPONENT NAME	ADDA_CUE	08/12
CIRCUIT BOARD NO.		COMPONENT PATH
VEP84293A:NTSC VEP84293B:PAL		
KR4F28(8/12)-1		SCM143

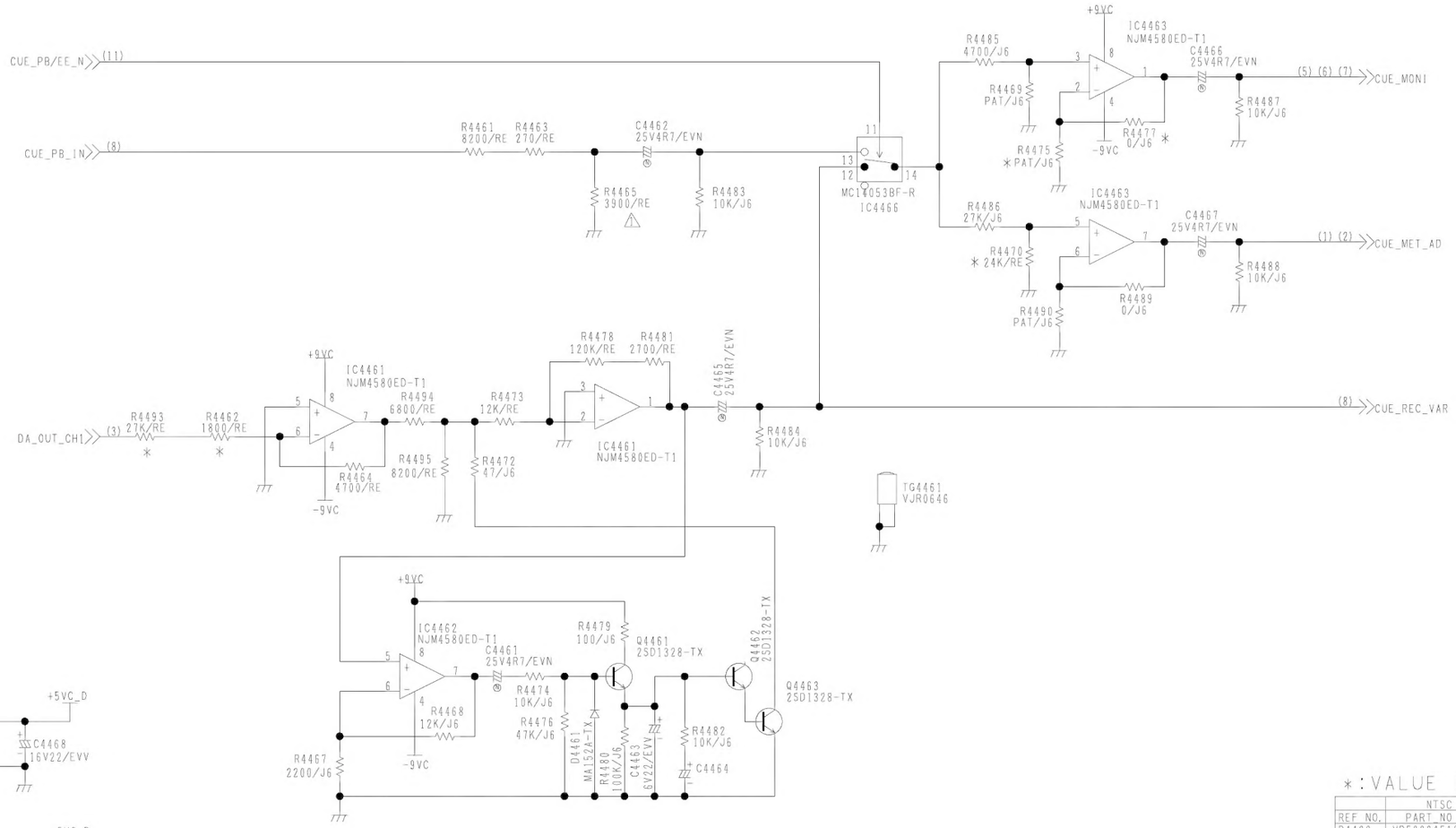

*:VALUE IS DIFFARENT for PAL

	NTSC		PAL	
REF NO.	PART NO	VAL	PART NO	VAL
R4462	VRE0034E182	1800/RE	VRE0034E183	18K/RE
R4470	VRE0034E243	24K/RE	ERJ6GEYJ393V	39K/RE
R4475	PAT	PAT/J6	ERJ6GEYJ392V	3900/J6
R4477	ERJ6GEY0R00V	0/J6	ERJ6GEYJ122V	1200/J6
R4493	VRE0034E273	27K/RE	VRE0034E183	18K/RE

Ref No4000 Series(4461-4500)

COMPONENT NAME	ADDA_CUE	09/12
CIRCUIT BOARD NO.		COMPONENT PATH
VEP84293A:NTSC VEP84293B:PAL		
KR4F28(9/12)-1		SCM144

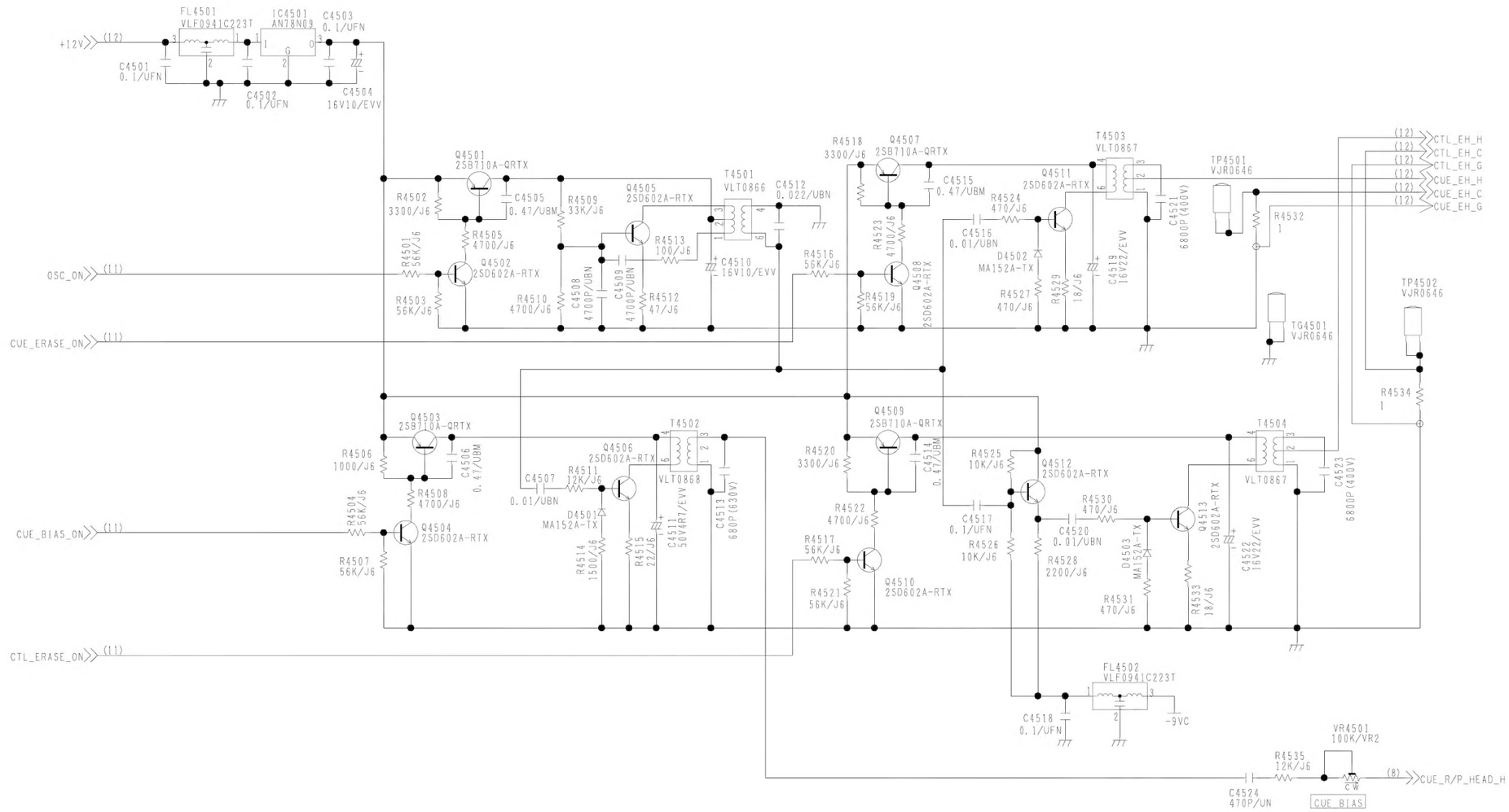

Ref No4000 Series(4501-4550)

COMPONENT NAME	ADDA_CUE	10/12
CIRCUIT BOARD NO.		COMPONENT PATH
VEP84293A:NTSC VEP84293B:PAL		
KR4F28(10/12)-1		SCM145

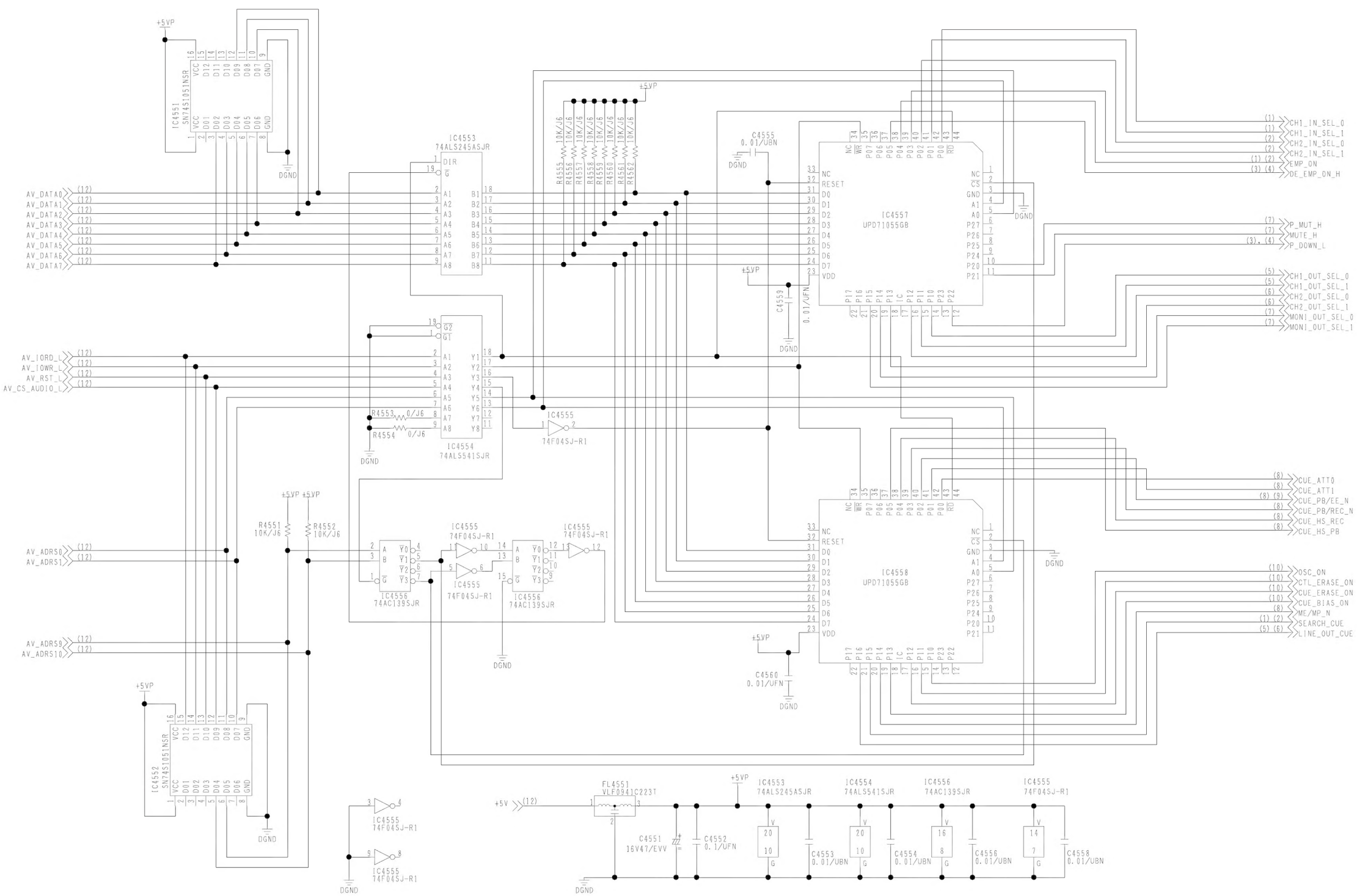

Ref No4000 Series (4551-45)

COMPONENT NAME	ADDA_CUE	11/12
CIRCUIT BOARD NO.	COMPONENT PATH	
VEP84293A:NTSC VEP84293B:PAL		
KR4F28(11/12)-1		SCM146

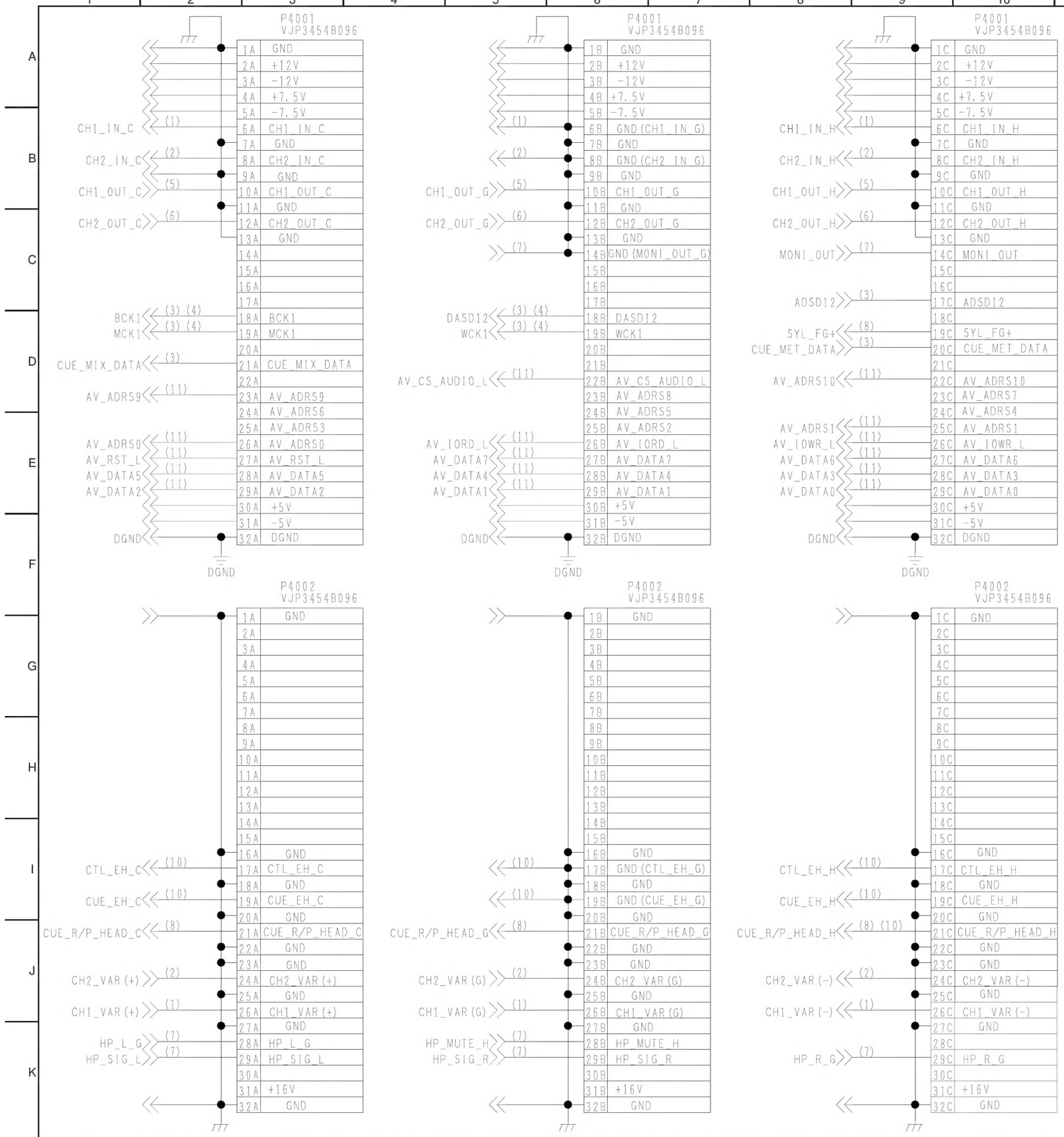

NO.	DATE	TDE NO.	NAME	NO.	DATE	TDE NO.	NAME
1				11			
2				12			
3				13			
4				14			
5				15			
6				16			
7				17			
8				18			
9				19			
10				20			

Ref No4000 Series

COMPONENT NAME	ADDA_CUE	12/12
CIRCUIT BOARD NO.	COMPONENT PATH	
VEP84293A:NTSC VEP84293B:PAL		
KR4F28(12/12)-1		SCM147